Beetronics
Blanchardstown Corporate Park, Dublin D15 AKK, Ireland
(01) 903 6425 · info@beetronics.ie

Model: PSU1-LOCK-UK

19V power adapter with lock, UK plug

View product online

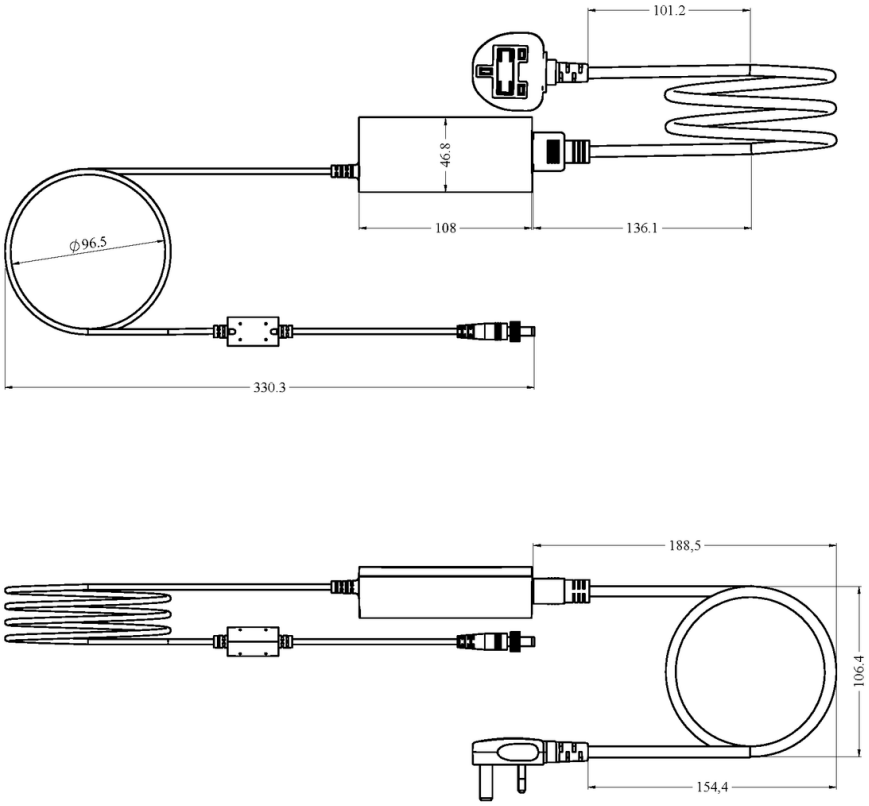

©2026 Beetronics

Dimensions are in mm.