Beetronics
Blanchardstown Corporate Park
Dublin D15 AKK
Ierland

Phone: (01) 903 6425
Fax: (01) 903 6436
E-mail: info@beetronics.ie
Web: www.beetronics.ie

Model: 9HD7M

9 Inch Monitor Metal

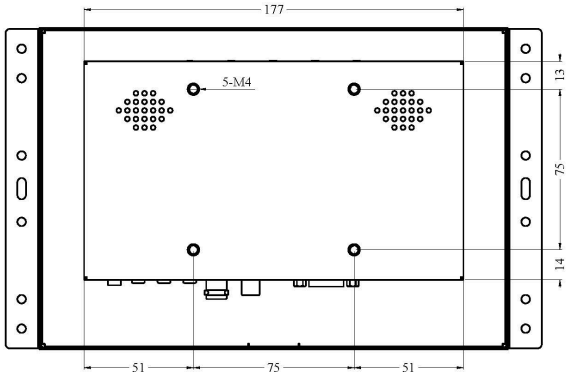

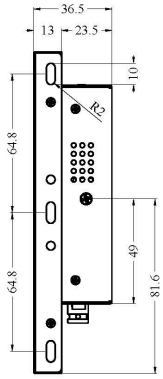

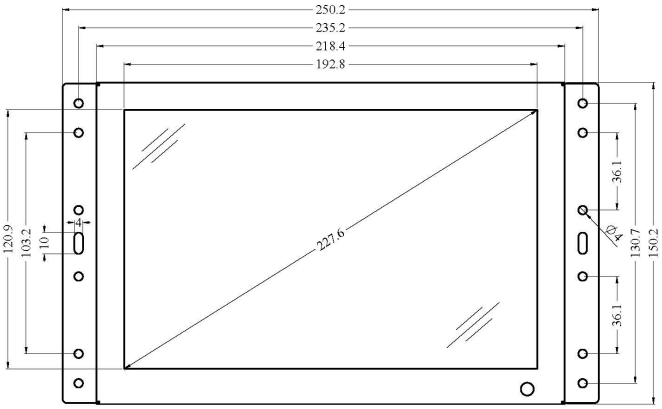

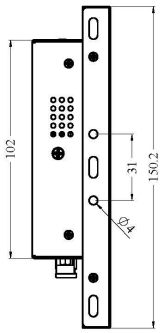

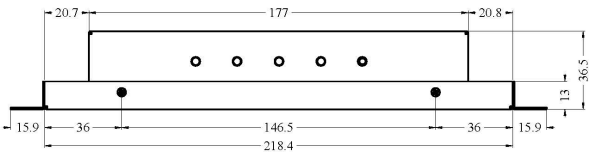

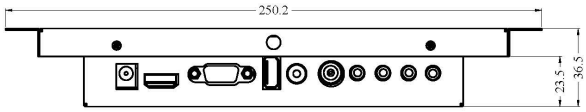

© 2026 Beetronics

Dimensions are in mm.